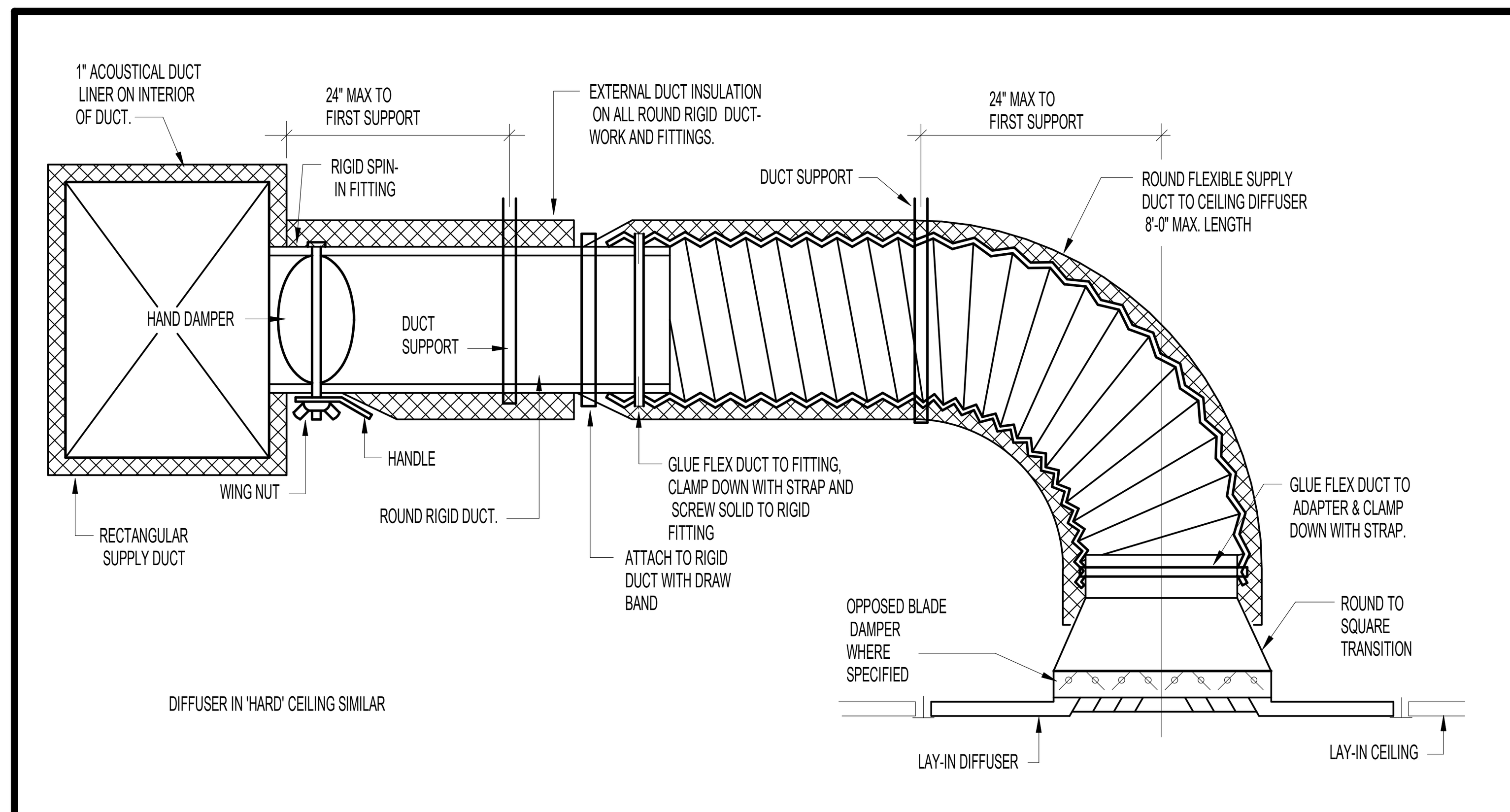

A CEILING DIFFUSER WITH FLEXIBLE DUCT

NO SCALE

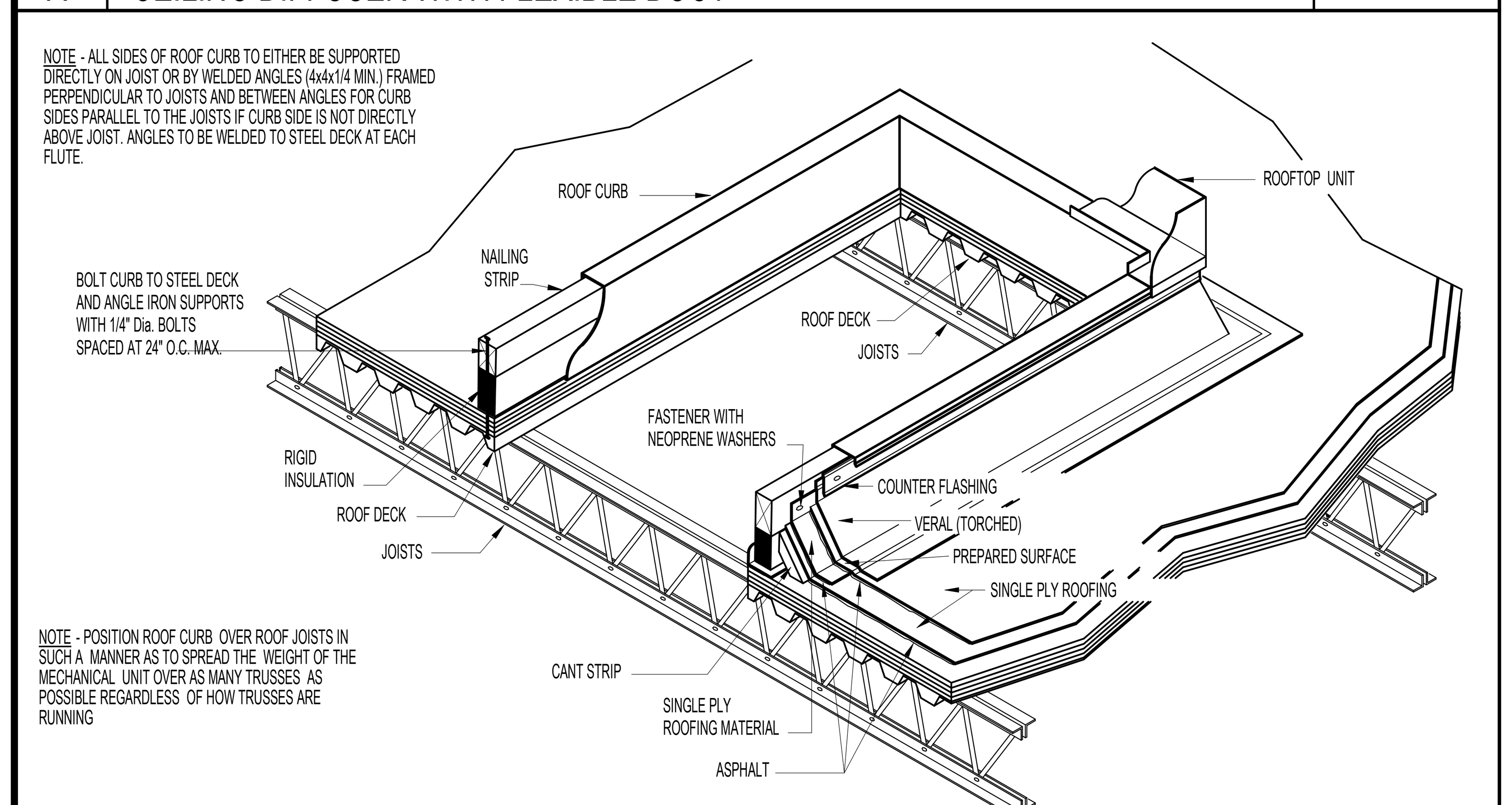

B TYPICAL ROOF TOP EQUIPMENT MOUNTING DETAIL

NO SCALE

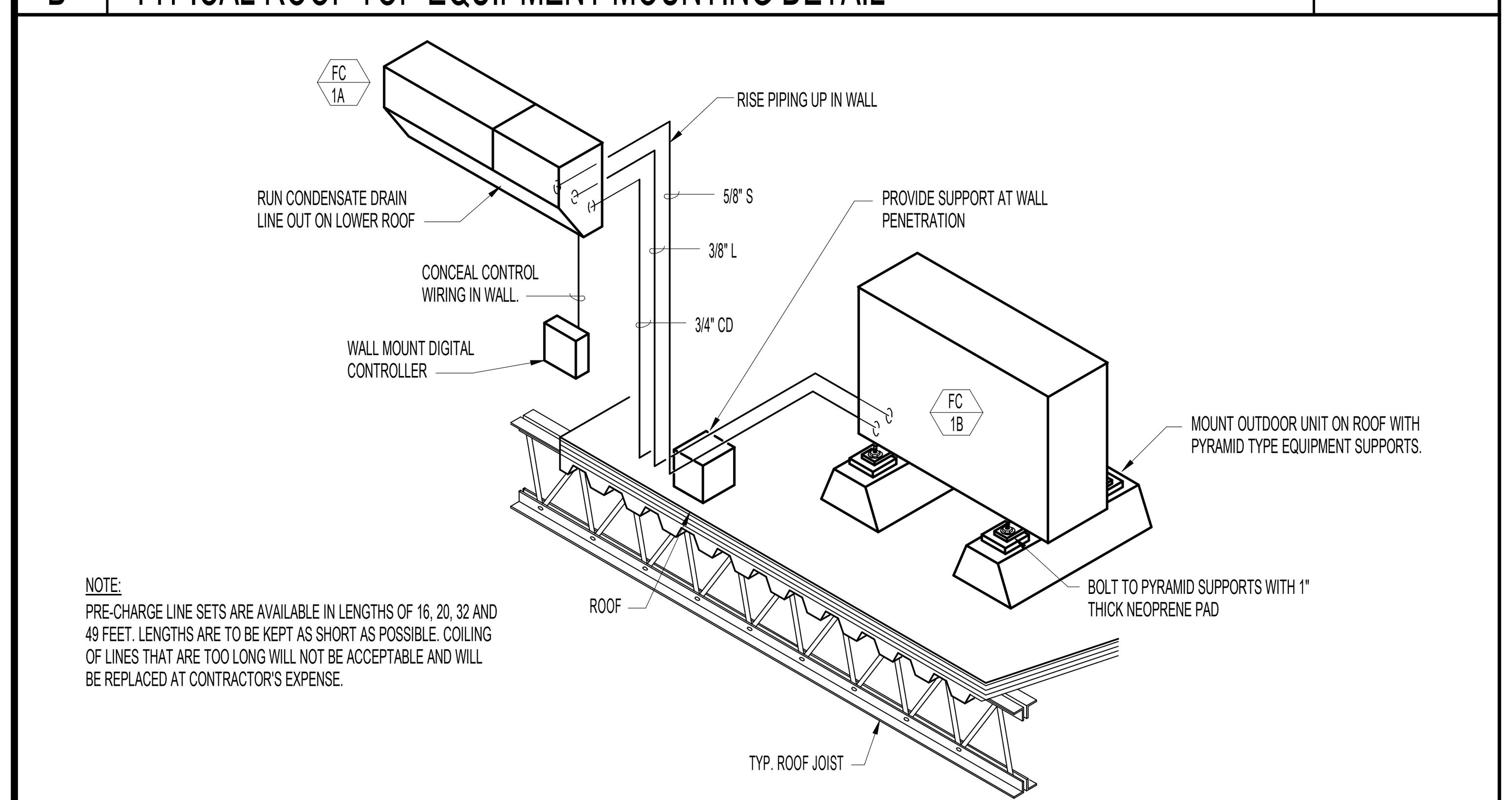

C TYPICAL ROOF TOP EQUIPMENT MOUNTING DETAIL

NO SCALE

HANGER SIZES FOR RECTANGULAR DUCT			
MAX. SIDE	HANGER	HORIZONTAL SUPPORT ANGLE	MAXIMUM SPACING
30"	1"x18 GAGE STRAP	NONE REQUIRED	10'-0"
36"	1/4" ROUND ROD	1-1/2"x1-1/2"x1/8"	8'-0"
48"	1/4" ROUND ROD	2"x2"x1/8"	8'-0"
60"	5/16" ROUND ROD	2"x2"x1/8"	8'-0"
84"	3/8" ROUND ROD	2"x2"x1/8"	8'-0"

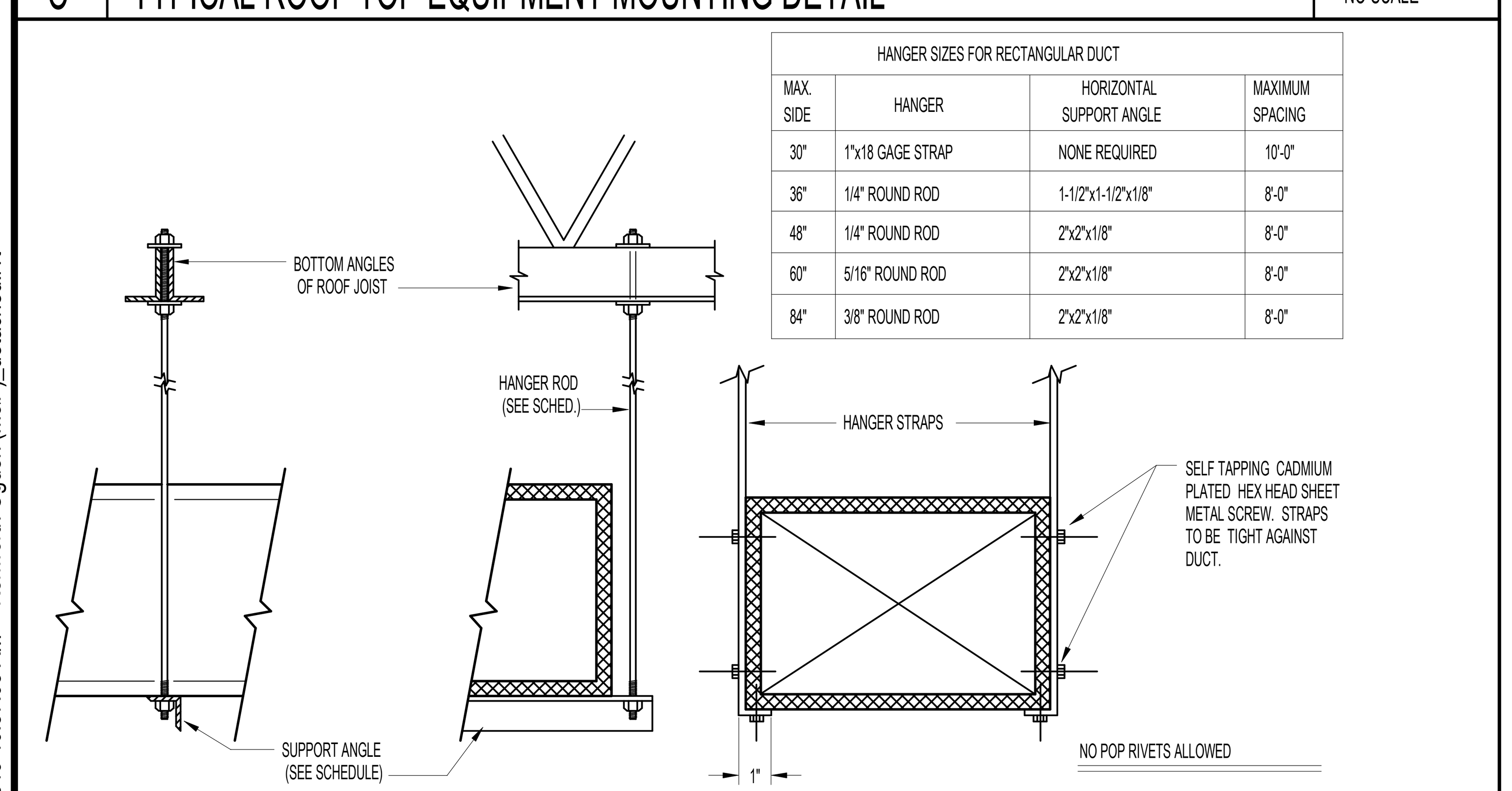

D DUCT STRAP HANGER DETAIL

NO SCALE

11/22/2019 10:37:03 AM Kenworth Ogden (M&P)_detached.rvt

GRILLE AND REGISTER SCHEDULE

SYM.	SIZE	THROW	CFM	CONSTR.	FINISH	BRANCH DUCT	F.D.	O.B.	REMARKS
CD-1	12 x 12		200-400	STEEL	WHITE	10" Dia.	NO	NO	PRICE SMD IN 24x24 LAY-IN MODULE
CD-2	12 x 12		50-199	STEEL	WHITE	8" Dia.	NO	NO	PRICE SMD IN 24x24 LAY-IN MODULE
CD-3	9 x 9		50-199	STEEL	WHITE	8" Dia.	NO	NO	PRICE SMD WITH BEVELED FRAME
CD-4	12 x 12		50-199	STEEL	WHITE	8" Dia.	NO	NO	PRICE SMD WITH BEVELED FRAME
SR-1	12 x 8		250-400	STEEL	WHITE	12 x 8	NO	NO	PRICE 520L
SR-2	12 x 8		250-400	STEEL	WHITE	IN DUCT	NO	YES	PRICE 520DL
RG-1	12 x 12		50-400	STEEL	WHITE	12 x 8	NO	NO	PRICE 535 IN 24x24 LAY-IN MODULE
RG-2	18 x 18		400-800	STEEL	WHITE	18 x 10	NO	NO	PRICE 535 IN 24x24 LAY-IN MODULE
RG-3	12 x 12		50-400	STEEL	WHITE	12 x 8	NO	NO	PRICE 535
RG-4	48 x 36		6000	STEEL	WHITE	48 x 36	NO	NO	PRICE MODEL LG100 WITH 1x1 SQUARE MESH
RG-5	30 x 18		1000-2000	STEEL	WHITE	IN PLENUM	NO	NO	PRICE 535L
RG-6	30 x 36		3000	STEEL	WHITE	36 x 30	NO	NO	PRICE 90 SERIES (HEAVY-DUTY)
EG-1	24 x 24		3000	STEEL	WHITE	24 x 24	NO	NO	PRICE MODEL LG100 WITH 1x1 SQUARE MESH
EG-2	10 x 10		300	ALUM.	ANODIZED	10 x 10	NO	NO	PRICE 635
OL-1	36 x 24		---	ALUM	ANODIZED	36 x 24	NO	NO	AMERICAN WARMING LE-31 WITH DRAINABLE BLADES AND BIRD SCREEN.
OL-2	30 x 36		---	ALUM	ANODIZED	36 x 30	NO	NO	AMERICAN WARMING LE-31 WITH DRAINABLE BLADES AND BIRD SCREEN.
PH-1	36W x 48L x 30H		6000	ALUM	ANODIZED	36 x 48	NO	NO	PENNBARRY MODEL PH 'PENNHOUSE' WITH BIRD SCREEN AND MOTORIZED DAMPER. MOUNT ON ROOF CURB. (500 FPM MX.)

SPLIT SYSTEM A/C UNIT SCHEDULE

INDOOR UNIT						OUTDOOR UNIT						REFRIG. LINES	
SYM.	CFM	BTU	CHAR	MCA		SYM.	BTU	MCA	SEER	CHAR	MANUFACTURER	LIQUID	SUCTION
FC 1A	600-700	30,000	208/60/1	1	MITSUBISHI MODEL PKA-A30KA WITH WALL MOUNTED CONTROLLER AND COND. PUMP	FC 1B	30,000	25	16	208/60/1	MITSUBISHI MODEL PUY-A30NHA3 WITH LOW AMBIENT 'HARD-START' KIT	3/8"	5/8"

EVAPORATIVE COOLER SCHEDULE

SYM.	TYPE	NOMINAL CFM	ACTUAL CFM	H.P.	CHAR.	SP	DB	WB	WATER CONNECT	WEIGHT	REMARKS
EC 1	DOWN DISCHARGE	12,000	6000	1/2	208/60/1	0.2"	95°F	65°F	1/2"	1000#	UNITED METAL PRODUCTS UMP-724XL WITH BELT DRIVE FAN, WATER PUMP AND PLENUM DIFFUSER BELOW ROOF.
EC 2	DOWN DISCHARGE	12,000	6000	1/2	208/60/1	0.2"	95°F	65°F	1/2"	1000#	UNITED METAL PRODUCTS UMP-724XL WITH BELT DRIVE FAN, WATER PUMP AND PLENUM DIFFUSER BELOW ROOF.
EC 3	DOWN DISCHARGE	12,000	6000	1/2	208/60/1	0.2"	95°F	65°F	1/2"	1000#	UNITED METAL PRODUCTS UMP-724XL WITH BELT DRIVE FAN, WATER PUMP AND PLENUM DIFFUSER BELOW ROOF.
EC 4	DOWN DISCHARGE	12,000	6000	1/2	208/60/1	0.2"	95°F	65°F	1/2"	1000#	UNITED METAL PRODUCTS UMP-724XL WITH BELT DRIVE FAN, WATER PUMP AND PLENUM DIFFUSER BELOW ROOF.
EC 5	DOWN DISCHARGE	12,000	6000	1/2	208/60/1	0.2"	95°F	65°F	1/2"	1000#	UNITED METAL PRODUCTS UMP-724XL WITH BELT DRIVE FAN, WATER PUMP AND PLENUM DIFFUSER BELOW ROOF.
EC 6	DOWN DISCHARGE	12,000	6000	1/2	208/60/1	0.2"	95°F	65°F	1/2"	1000#	UNITED METAL PRODUCTS UMP-724XL WITH BELT DRIVE FAN, WATER PUMP AND PLENUM DIFFUSER BELOW ROOF.
EC 7	DOWN DISCHARGE	12,000	6000	1/2	208/60/1	0.2"	95°F	65°F	1/2"	1000#	UNITED METAL PRODUCTS UMP-724XL WITH BELT DRIVE FAN, WATER PUMP AND PLENUM DIFFUSER BELOW ROOF.

UNIT HEATER SCHEDULE

SYM.	TYPE	CFM	H.P.	CHAR.	A.G.A. INPUT	A.G.A. OUTPUT	EAT	LAT	SUP.	FUEL TYPE	FLUE	WEIGHT	REMARKS
UH 1	PROPELLER	1350	1/20	120/60/1	105,000	87,150	65°F	100°F	1/2"	NAT.	(2) 4"Dia	200#	REZNOR UDAS-100 SEALED COMBUSTION UNIT WITH WALL MOUNTED SENSOR
UH 2	PROPELLER	1350	1/20	120/60/1	105,000	87,150	65°F	100°F	1/2"	NAT.	(2) 4"Dia	200#	REZNOR UDAS-100 SEALED COMBUSTION UNIT WITH WALL MOUNTED SENSOR
UH 3	PROPELLER	1350	1/20	120/60/1	105,000	87,150	65°F	100°F	1/2"	NAT.	(2) 4"Dia	200#	REZNOR UDAS-100 SEALED COMBUSTION UNIT WITH UNIT MOUNTED SENSOR
UH 4	PROPELLER	450	1/30	120/60/1	40,000	33,200	65°F	100°F	1/2"	NAT.	(2) 4"Dia	100#	REZNOR UDAS-040 SEALED COMBUSTION UNIT WITH UNIT MOUNTED SENSOR

ROOF TOP HEATING & AIR CONDITIONING UNIT SCHEDULE

SYM.	CFM	MINIMUM O.A.	SP_E	BLOWER H.P.	CHAR	MCA	SEER	WEIGHT	GAS CONN	HEATING (AT SEA LEVEL) MBH IN	MBH OUT	EAT	LAT	COOLING MBH	SEER	EAT	LAT	REMARKS (1)
RT 1	1880	500	.75"	1	208/60/3	30.0	14	900#	1/2"	130	106.6	65°F	110°F	60.0	14.0	75°F	55°F	TRANE YHC060E3 COMPLETE WITH ROOF CURB AND CONVENIENCE OUTLET.
RT 2	1600	300	.75"	1	208/60/3	27.2	14	850#	1/2"	120	96.0	65°F	110°F	48.0	14.0	75°F	55°F	TRANE YHC036E3 COMPLETE WITH ROOF CURB AND CONVENIENCE OUTLET.
RT 3	1200	150	.75"	1	208/60/3	20.6	14	850#	1/2"	60	49.2	65°F	100°F	36.0	15.0	75°F	55°F	TRANE YHC036E3 COMPLETE WITH ROOF CURB AND CONVENIENCE OUTLET.
RT 4	1200	300	.75"	1	208/60/3	20.6	14	850#	1/2"	60	49.2	65°F	100°F	36.0	15.0	75°F	55°F	TRANE YHC036E3 COMPLETE WITH ROOF CURB AND CONVENIENCE OUTLET.

(1) UNIT TO BE COMPLETE WITH FACTORY ROOF CURB, DOWNFLOW CONFIGUARATION, 2" PLEATED FILTERS AND GFCI CONVENIENCE OUTLET.

RADIANT HEATER SCHEDULE

SYM.	TYPE	BTU	# BURNERS	AMPS	CHAR.	BURNER TUBES SEC. LENGTH	GAS SIZE	FUEL	TUBE SIZE	REMARKS
RH 1	SUSPENDED	60,000	1	1	120/60/1	30'-0"	1/2"	NAT	4"	SUPERIOR RADIANT PRODUCTS SERIES UA60N3A COMPLETE WITH REFLECTOR. MOUNT AT 22'-0" ABOVE FLOOR.
RH 2	SUSPENDED	60,000	1	1	120/60/1	30'-0"	1/2"	NAT	4"	SUPERIOR RADIANT PRODUCTS SERIES UA60N3A COMPLETE WITH REFLECTOR. MOUNT AT 22'-0" ABOVE FLOOR.
RH 3	SUSPENDED	60,000	1	1	120/60/1	30'-0"	1/2"	NAT	4"	SUPERIOR RADIANT PRODUCTS SERIES UA60N3A COMPLETE WITH REFLECTOR. MOUNT AT 22'-0" ABOVE FLOOR.
RH 4	SUSPENDED	60,000	1	1	120/60/1	30'-0"	1/2"	NAT	4"	SUPERIOR RADIANT PRODUCTS SERIES UA60N3A COMPLETE WITH REFLECTOR. MOUNT AT 22'-0" ABOVE FLOOR.
RH 5	SUSPENDED	60,000	1	1	120/60/1	30'-0"	1/2"	NAT	4"	SUPERIOR RADIANT PRODUCTS SERIES UA60N3A COMPLETE WITH REFLECTOR. MOUNT AT 22'-0" ABOVE FLOOR.
RH 6	SUSPENDED	60,000	1	1	120/60/1	30'-0"	1/2"	NAT	4"	SUPERIOR RADIANT PRODUCTS SERIES UA60N3A COMPLETE WITH REFLECTOR. MOUNT AT 22'-0" ABOVE FLOOR.

EXHAUST FAN SCHEDULE

SYM.	TYPE	C.F.M.	S.P.E.	WATTS	CHAR.	R.P.M.	CONTROL	REMARKS
EF 1	CEILING MOUNTED	150	.25"	100	120/60/1	710	WITH LIGHTS	TWIN CITY MODEL T150 WITH BACK-DRAFT DAMPER AND 6" Dia. DUCT TO ROOF CAP. PLACE DAMPER AT BUILDING ENVELOPE.
EF 2	CEILING MOUNTED	150	.25"	100	120/60/1	710	WITH LIGHTS	TWIN CITY MODEL T150 WITH BACK-DRAFT DAMPER AND 6" Dia. DUCT TO ROOF CAP. PLACE DAMPER AT BUILDING ENVELOPE.
EF 3	CEILING MOUNTED	150	.25"	100	120/60/1	710	WALL SWITCH	TWIN CITY MODEL T150 WITH BACK-DRAFT DAMPER AND 6" Dia. DUCT TO ROOF CAP. PLACE DAMPER AT BUILDING ENVELOPE.
EF 4	CEILING MOUNTED	200	.25"	127	120/60/1	740	WITH LIGHTS	TWIN CITY MODEL T150 WITH BACK-DRAFT DAMPER AND 6" Dia. DUCT TO WALL CAP. PLACE DAMPER AT BUILDING ENVELOPE.
EF 5	CEILING MOUNTED	150	.25"	100	120/60/1	710	WITH LIGHTS	TWIN CITY MODEL T100 WITH BACK-DRAFT DAMPER AND 6" Dia. DUCT TO WALL CAP. PLACE DAMPER AT BUILDING ENVELOPE.
EF 6	8' PENDANT	---	---	1/2 HP	208/60/3	120	WALL SWITCH	PATTERSON V-SERIES HVLS CEILING FAN, (8'-0" Dia.) MOUNT AT 20'-0" ABOVE FLOOR.
EF 7	8' PENDANT	---	---	1/2 HP	208/60/3	120	WALL SWITCH	PATTERSON V-SERIES HVLS CEILING FAN, (8'-0" Dia.) MOUNT AT 20'-0" ABOVE FLOOR.
EF 8	8' PENDANT	---	---	1/2 HP	208/60/3	120	WALL SWITCH	PATTERSON V-SERIES HVLS CEILING FAN, (8'-0" Dia.) MOUNT AT 20'-0" ABOVE FLOOR.
EF 9	16' PENDANT	--	---	1 HP	208/60/3	80	WALL SWITCH	PATTERSON V-SERIES HVLS CEILING FAN (16'-0" Dia.) MOUNT ABOVE BRIDGE CRANE EQUIPMENT.
EF 10	16' PENDANT	--	---	1 HP	208/60/3	80	WALL SWITCH	PATTERSON V-SERIES HVLS CEILING FAN (16'-0" Dia.) MOUNT ABOVE BRIDGE CRANE EQUIPMENT.
EF 11	16' PENDANT	--	---	1 HP	208/60/3	80	WALL SWITCH	PATTERSON V-SRIES HVLS CEILING FAN (16'-0" Dia.) MOUNT ABOVE BRIDGE CRANE EQUIPMENT.
EF 12	16' PENDANT	--	---	1 HP	208/60/3	80	WALL SWITCH	PATTERSON V-SERIES HVLS CEILING FAN (16'-0" Dia.) MOUNT ABOVE BRIDGE CRANE EQUIPMENT.
EF 13	ROOF-TOP CENTRIFUGAL	3000	.25"	1/2 HP	120/60/1	750	WALL SWITCH	TWIN CITY MODEL 180C-BCRD WITH BACK-DRAFT DAMPER AND 24x24 SLEEVE THRU ROOF.
EF 14	ROOF-TOP CENTRIFUGAL	3000	.25"	1/2 HP	120/60/1	750	WALL SWITCH	TWIN CITY MODEL 180C-BCRD WITH BACK-DRAFT DAMPER AND 24x24 SLEEVE THRU ROOF.
EF 15	ROOF-TOP CENTRIFUGAL	3000	.25"	1/2 HP	120/60/1	750	WALL SWITCH	TWIN CITY MODEL 180C-BCRD WITH BACK-DRAFT DAMPER AND 24x24 SLEEVE THRU ROOF.
EF 16	ROOF-TOP CENTRIFUGAL	300	.25"	1/4 HP	120/60/1	975	COOLING STAT	TWIN CITY MODEL 085C-BCRD WITH BACK-DRAFT DAMPER AND 10x10 DUCT THRU ROOF.

GENERAL NOTES:

A- THE CONTRACTOR SHALL CHECK AND VERIFY ALL DIMENSIONS AND CONNECTIONS ON THE JOB SITE. ALL WORK SHALL BE EXECUTED FROM MEASUREMENTS TAKEN AT THE SITE.

B- THE MECHANICAL CONTRACTOR SHALL BE RESPONSIBLE TO INSURE PROPER CODE CLEARANCES FOR ELECTRICAL AND MECHANICAL ACCESS WHEN INSTALLING ANY EQUIPMENT SUPPLIED BY THE MECHANICAL CONTRACTOR.

C- IT IS CRITICAL THAT THIS CONTRACTOR COORDINATE EQUIPMENT LOCATIONS WITH PIPING, DUCTWORK, ELECTRICAL CONDUIT AND BUILDING STRUCTURE TO INSURE CODE COMPLIANCE.

D- CEILING DIFFUSERS ARE SHOWN IN APPROXIMATE LOCATIONS. REFER TO LIGHTING PLANS AND REFLECTED CEILING PLAN FOR EXACT LOCATIONS.

E- DUCT DIMENSIONS CALLED OUT ON DRAWINGS ARE INSIDE FREE AREA DIMENSIONS. ACOUSTICAL DUCT LINER ARE TO BE ADDED TO OVERALL MEASUREMENTS.

F- ALL DUCTWORK AND PIPING WHICH PASSES THRU FIRE RATED WALLS TO BE FIRE STOPPED WITH APPROVED FOAM OR SEALANT. REFER TO SPECIFICATIONS FOR APPROVED MANUFACTURES.

REGISTERED PROFESSIONAL ENGINEER No. 322330 DWAYNE C. SUDWEEKS 11-22-19 STATE OF UTAH

Engineered Systems Associates
1355 EAST CENTER
POCATELLO, IDAHO 83201
PHONE: (208) 233-0501
FAX: (208) 233-0529
EMAIL: esa@engsystems.com

ESA JOB NUMBER: 19035

nbwarchitectsp.a.
ARCHITECTURE / PLANNING / INTERIORS
SCOTT L NIELSON, A.I.A. KEVIN R BODILY, A.I.A. JAMES H WYATT, A.I.A
990 JOHN ADAMS PARKWAY P.O. BOX 2212 - IDAHO FALLS, IDAHO 83402-2212
(P) 208-522-8779 (F) 208-522-8785 (W) nbwarchitects.com

PROJECT: A NEW BUILDING FOR: KENWORTH SALES COMPANY INC.
1750 SOUTH 1350 WEST
NEW HAVEN, UTAH

SHEET TITLE: MECHANICAL SCHEDULES

REVISIONS

PROJECT NO. 16066
DATE: NOVEMBER 2019
DRAWN BY: Author
CHECKED BY: Checker
DRAWING NO.: M3.3